MEDICAL HANDWHEELS AND KITS

Gascon Systems can offer a full range of medical gas sleeve indexed handwheels complying with AS2896.

All the handwheels have a solid brass core surrounded with a colour coded outer nylon moulding. Kits with hose barbed nipple come including nipple o-ring and securing OTK clip.

Other handwheel kits can are available on request, (eg. with 1/4"NPT adaptors, 1/8"NPT adaptors, flowmeter inlet adaptors ...etc. Just tell us what you want.

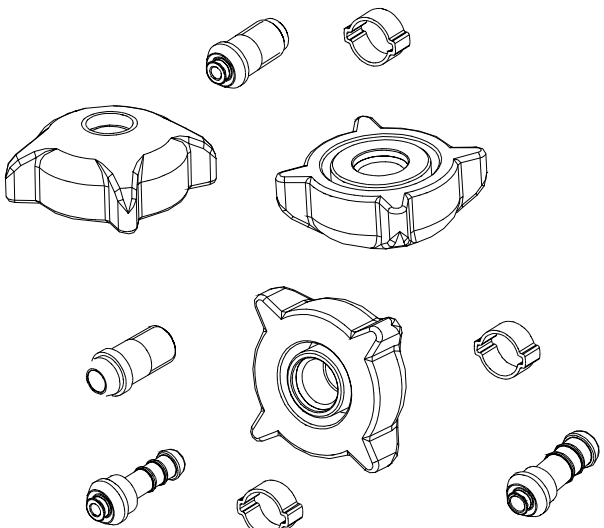

ORDERING INFORMATION

PART No		-	GAS	
G2030	Handwheel Only		AIR	Breathing Air
G2032	Handwheel, 5mm Nipple		CARB	Carbogen
G2033	Handwheel, 1/4" Nipple		CO2	Carbon Dioxide
G2034	Handwheel, 8mm Nipple		ENT	Entonox
G2035	Handwheel, 3/8"-26 Solid Nipple		N2O	Nitrous Oxide
G2044	Handwheel, 3/8"-26 O-ring Nipple		OXY	Oxygen
			SCAV	Gas Scavenge
			SUCT	Suction/Vacuum
			SURG	Surgical/Turbine Tools

Ordering Example	G2032-OXY	Oxygen Handwheel Kit with 5mm Nipple
	G2030-SUCT	Suction Handwheel Only